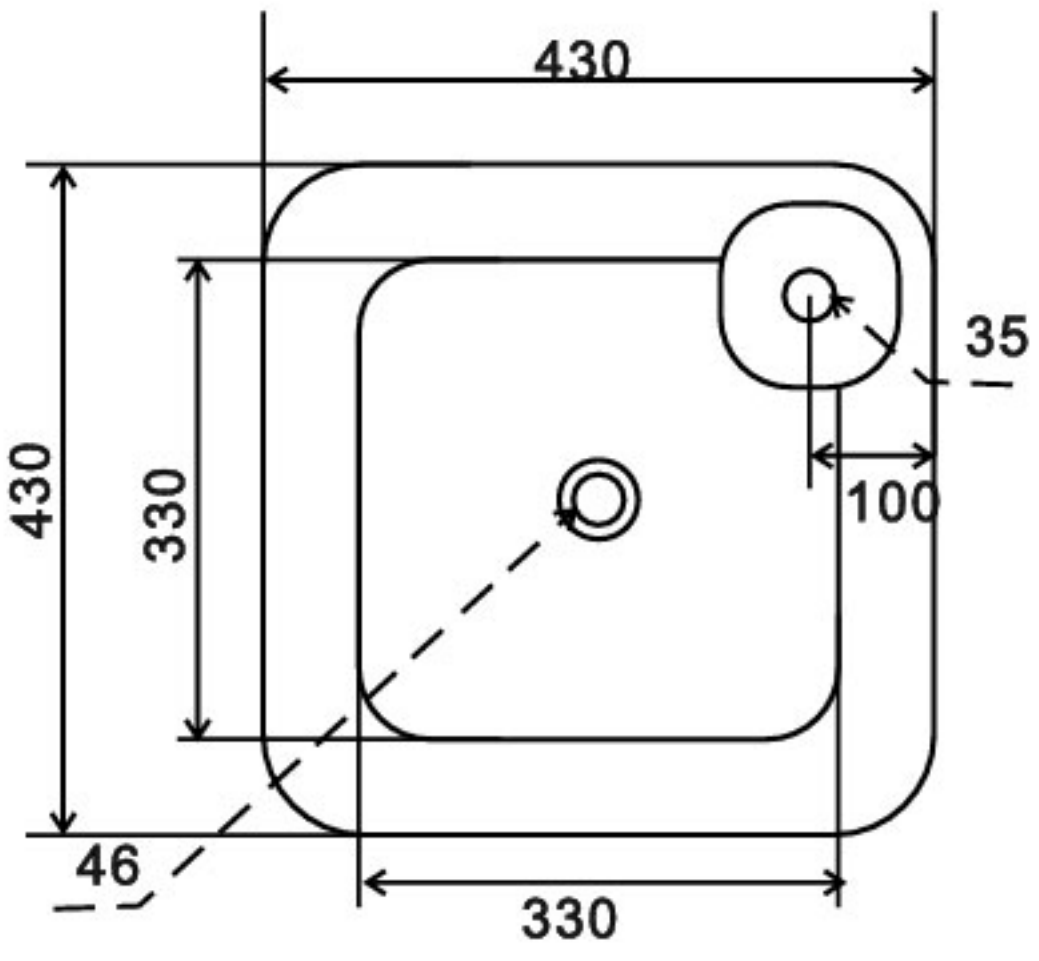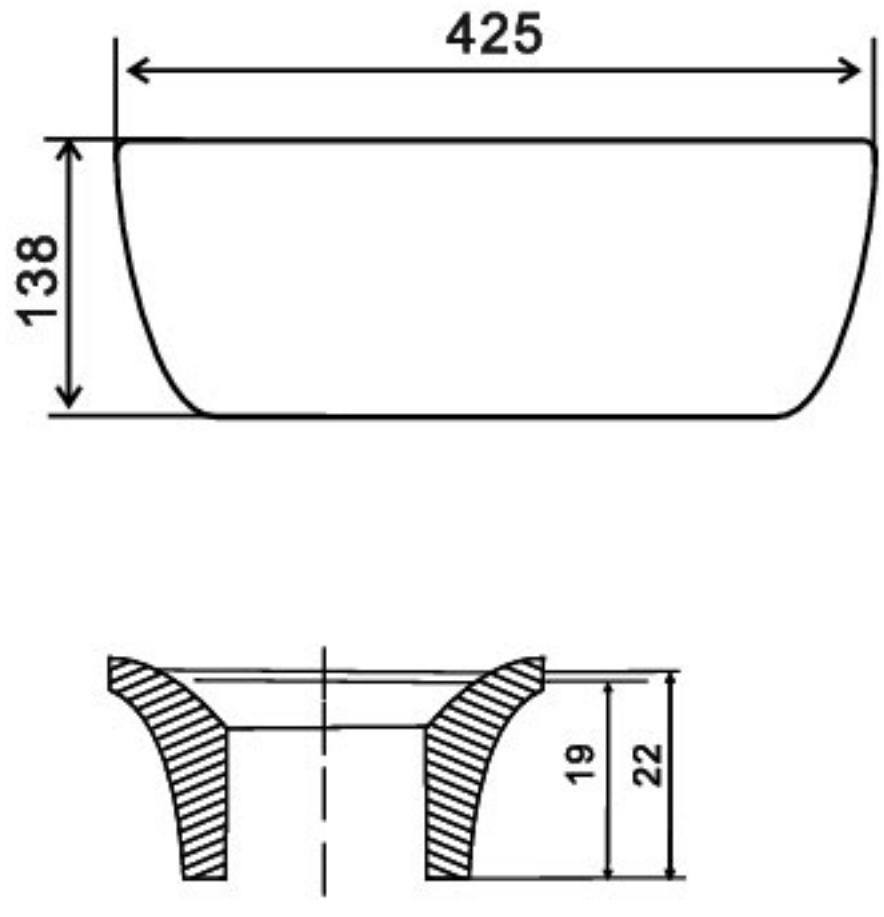TR41267